**Montana Secretary of State**
**Help America Vote Act (HAVA) Accessibility Checklist**
**for Primary and General Election Polling Place Certification**
(as authorized in ARM 44.3.102 and 44.3.105(4))

County _____ Precinct _____
Polling Place Name_____
Polling Place Address:_____
(street address) (city) (state) (zip)

**As you complete the survey** keep in mind that people with disabilities arriving at the polling place should be able to approach the building and enter *as freely as everyone else. At least one route of travel should be safe and accessible for everyone,* including those with disabilities.

| Questions | Yes | No | NA | ➔ | ➔ | Possible Solutions<br>If no, consider making these changes: |
|---|---|---|---|---|---|---|
| **A. PARKING** | | | | | | |
| 1) Does the polling place have:<br>a) parking spaces available? | ☐ | ☐ | | | ☐ | Create or designate some type of parking area in order to provide accessible parking. |
| b) distinctly-marked accessible parking spaces? | ☐ | ☐ | | | ☐ | Construct required number of accessible parking spaces. (See table, page 2). |
| **Note:** All polling places are required to have the proper number of accessible parking spaces for the election. Any spaces constructed for this purpose *should* be permanent, but *may* be temporary for voting day only. | | | | | | |
| 2) Are the accessible parking spaces the closest parking spaces to the accessible entrance? | ☐ | ☐ | ☐ | | ☐ | Relocate spaces so they are closest spaces to the accessible entrance. |
| 3) Is this area stable, firm and slip-resistant, with no changes in level greater than ½ inch? | ☐ | ☐ | ☐ | | ☐<br>☐<br>☐ | Replace gravel with hard surface.<br>Repair uneven paving.<br>Fill small bumps and breaks |
| 4) Is there at least 98 inches (8 feet, two inches) of vertical clearance above each accessible parking space, access aisle, and vehicular route? | ☐<br>vertical clearance | ☐ | ☐ | | ☐<br>☐ | Reconfigure/relocate parking spaces in order to achieve the required clearance.<br>Remove objects protruding into the required clearance area. |
| 5) Is the required number of accessible, 8-foot-wide parking spaces provided? (See table at right.) | ☐<br>number of accessible spaces | ☐ | | | ☐ | Reconfigure to provide correct number of accessible spaces in the proper dimensions. |

| Questions | Yes | No | NA | ➔ | ➔ | Possible Solutions<br>If no, consider making these changes: |
|---|---|---|---|---|---|---|
| | width of existing accessible spaces | | | | | Total number of spaces / Required number of accessible spaces<br>1 to 25 — 1 space<br>26 to 50 — 2 spaces<br>51 to 75 — 3 spaces<br>76 to 100 — 4 spaces |
| 6) Is at least one van accessible parking space provided? (One required for every 6 accessible spaces.) | ☐ number of spaces | ☐ | | | ☐ | Reconfigure to provide correct number of van accessible spaces. |
| 7) Does each accessible space include an access aisle that is: | | | | | | |
| a) 5-feet wide for standard accessible spaces? | ☐ | ☐ | ☐ | | ☐ | Reconfigure to provide correct number of access aisles of the proper dimensions. |
| b) 5-feet wide for van-accessible spaces that are 11-feet in width, or 8-feet wide for van accessible spaces of 8-feet in width? (16-feet total for van accessible spaces.) | ☐ | ☐ | ☐ | | ☐ | Clearly mark the access aisle(s). |
| **Note:** Each accessible parking space must have an access aisle, but accessible spaces may share access aisles. | | | | | | |
| 8) Do all accessible parking spaces and access aisles have a slope of 1:48 or less? (See note at right.) | ☐ | ☐ | ☐ | | ☐ | Relocate accessible parking space(s).<br>**Note:** Slope is the ratio of height to length. 1:48 means the ramp height increases 1 inch for every 48 inches of ramp length. |
| 9) Do all access aisles connect to an accessible route that goes to an accessible entrance? | ☐ | ☐ | ☐ | | ☐<br>☐<br>☐ | Add curb ramps/cuts.<br>Reconstruct sidewalk.<br>Choose alternative accessible route. |
| 10) Are all accessible parking spaces clearly marked by a sign with the accessibility symbol attached? | ☐ | ☐ | ☐ | | ☐ | Add proper signs, placed so that they are not obstructed by cars, vegetation, or other objects. |
| 11) For each van accessible parking space, is there a "Van Accessible" sign mounted on the same post below the accessibility symbol? | ☐ | ☐ | ☐ | | ☐ | Add "Van Accessible" signs placed so they are not obstructed by cars or other objects. |
| **Note:** Signs must be attached to a pole or building directly in front of each parking space. Painting the accessibility symbol on the surface of the parking space doesn't meet this requirement. | | | | | | |
| 12) Are all accessible and van accessible parking signs mounted a minimum of 5 feet above the ground? | ☐ | ☐ | ☐ | | ☐ | Mount signs at the correct height. |
| **B. PASSENGER DROP-OFF AREAS** | | | ☐ | | | ** Please mark any questions that are not applicable to this polling place **"NA."*** |
| 1) Is the vehicle space at least 8-feet | ☐ | ☐ | | | ☐ | Find a suitable drop-off area with |

| Questions | Yes | No | NA | ➔ | ➔ | Possible Solutions<br>If no, consider making these changes: |
|---|---|---|---|---|---|---|
| wide and 20-feet long? (See figure below.) | | | | | | room for an access aisle. |
| 2) Is the slope of the vehicle space no more than 1:48? | ☐ | ☐ | | | ☐ | Find a location that's relatively level and on an accessible route. |
| 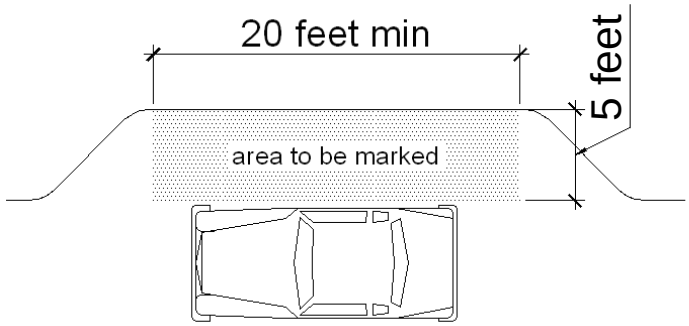 <br>**Access aisle for passenger drop-off area** | | | | | | |
| 3) Is an access aisle provided that is at least 5-feet wide and the same length as the vehicle space? (See above figure.) | ☐ | ☐ | | | ☐ | Find a suitable drop-off area with room for an access aisle. |
| 4) Is the access aisle the same level as the vehicle space? | ☐ | ☐ | | | ☐<br>☐ | Install curb ramps/cuts.<br>Find a more suitable drop-off area with an accessible route to the building entrance. |
| 5) Is this area stable, firm and slip-resistant, with no changes in level greater than ½ inch? | ☐ | ☐ | | | ☐<br>☐<br>☐ | Repair uneven paving.<br>Fill small bumps and breaks.<br>Replace gravel with hard-topped surface. |
| 6) Is there at least 9½ feet of vertical clearance above the vehicle space of the drop-off area, as well as above the vehicle route from the parking facility or lot entrance to the exit? | ☐ | ☐ | | | ☐ | Find a more suitable drop-off area with sufficient overhead clearance. |
| **C. SIDEWALKS AND WALKWAYS** | | | | | | |

| Questions | Yes | No | NA | ➔ | ➔ | Possible Solutions<br>If no, consider making these changes: |
|---|---|---|---|---|---|---|
| 1) Is there a route of travel from the accessible parking space/drop-off area to the accessible entrance without any stairs? | ☐ | ☐ | | | ☐<br>☐ | Add a ramp.<br>Find an alternative route on level ground. |
| 2) Is this route stable, firm and slip-resistant, with no changes in level greater than ½ inch? | ☐ | ☐ | ☐ | | ☐<br>☐<br>☐ | Repair uneven paving.<br>Fill small bumps and breaks.<br>Replace gravel with hard-topped surface. |
| 3) Is this route at least 36 inches wide? | ☐<br>width | ☐ | ☐ | | ☐<br>☐ | Change/move landscaping, furnishings, or other objects that narrow the path of travel.<br>Widen route. |
| 4) Are slopes on the route no steeper than 1:20? | ☐ | ☐ | ☐ | | ☐ | Add a ramp. |
| 5) Do curbs on the accessible route have ramps/cuts at drives, parking and drop-offs? | ☐ | ☐ | ☐ | | ☐<br>☐ | Install curb cut.<br>Add a curb ramp connecting with the curb. |
| 6) Are curb ramps/cuts on the route at least 36 inches wide, excluding flared edges? | ☐<br>width | ☐ | ☐ | | ☐ | Widen curb ramps/cuts. |
| 7) Is the slope of the curb ramps/cuts no more that 1:12? | ☐ | ☐ | ☐ | | ☐<br>☐ | Lengthen curb ramp/cut to decrease slope.<br>Relocate the curb ramp/cut. |
| 8) Is the route free of any objects that protrude more than 4 inches? If no: | ☐<br>distance | ☐ | ☐ | | | **Note:** It is not necessary to remove objects that protrude less than four inches from the wall, no matter their height above the ground or floor. |
| a) Is the object within 27 inches of the floor or ground so that it is *low enough* to be detectable by a person using a cane? (See figure below.) | ☐<br>inches from floor | ☐ | ☐ | | ☐<br>☐ | Move or remove protruding objects.<br>Place a cane-detectable object on the ground underneath as a warning barrier. |
| b) Is the object at least 80 inches above the floor or ground so that it is *high enough* to walk beneath it? (See figure below.) | ☐<br>inches from floor | ☐ | ☐ | | ☐<br>☐ | Move object out of the accessible route.<br>Place a cane-detectable object on the ground underneath as a warning barrier. |

| Questions | Yes | No | NA | ➔ | ➔ | Possible Solutions<br>If no, consider making these changes: |
|---|---|---|---|---|---|---|
| **Note:** Door closers and doorstops are allowed to be *78 inches* above the floor.<br><br>**80 inches of clear space and headroom are required**<br><br>**Objects within 27 inches of the floor are cane-detectable** | | | | | | |
| 9) Is the route free of gratings or other openings in the surface larger than ½ inch?<br><br>**Note:** Elongated openings must be placed perpendicular to the dominant direction of travel. (See figure at right.)<br><br>**Gratings and other openings** | ☐ | ☐ | ☐ | | ☐ | Find/create an alternative accessible route. |
| **D. BUILDING ENTRANCE**<br>The building layout should allow people with disabilities to access the voting area *without assistance.* | | | | | | |
| 1) If there are stairs at the main entrance, is there also a ramp?<br><br>*If yes,* complete **APPENDIX I—RAMPS**. | ☐ | ☐ | ☐ | | ☐<br>☐<br>☐ | Install ramp (portable or temporary).<br>Find/create alternative accessible entrance.<br>Attach **APPENDIX I—RAMPS**. |
| 2) If the main entrance is not accessible and it's not feasible to make it accessible, is there an alternate accessible entrance?<br><br>**Note:** If it's not possible to make the main entrance accessible, create a *dignified* alternate entrance. Don't use a service entrance unless there is no other option. Make sure accessible parking is as close as possible. | ☐ | ☐ | ☐ | | ☐<br>☐ | Create alternative accessible entrance.<br>Move voting to an accessible location. |

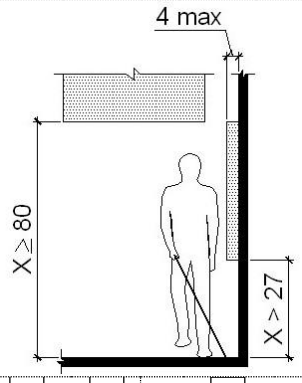


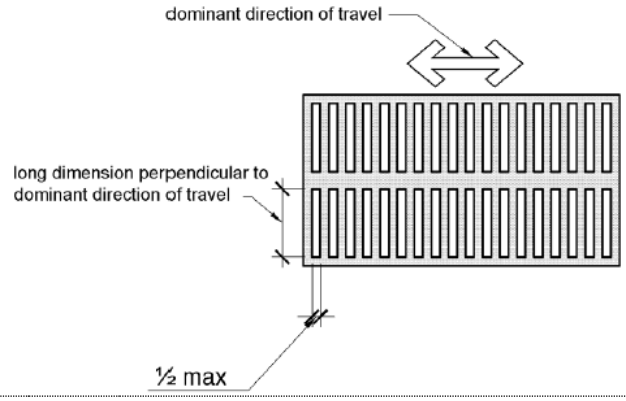

| Questions | Yes | No | NA | ➔ | ➔ | Possible Solutions<br>If no, consider making these changes: |
|---|---|---|---|---|---|---|
| 3) Can the alternate accessible entrance be used without assistance? | ☐ | ☐ | ☐ | | ☐ | Eliminate wherever possible the need for assistance (to answer a doorbell, to operate a lift, or to put down a temporary ramp). |
| 4) Do inaccessible entrances have signs directing voters to the nearest accessible entrance? | ☐ | ☐ | ☐ | | ☐ | Install signs before inaccessible entrance so people don't have to retrace their path. |
| 5) Is there adequate maneuvering clearance for a wheelchair on each side of the doorway? See **APPENDIX IV—MANEUVERING CLEARANCE.**<br><br>**Note:** A person using a wheelchair or crutches needs this clear floor space to move out of the way of the door when opening it. | ☐ | ☐ | | | ☐<br>☐<br>☐<br>☐<br>☐<br>☐ | Create a larger landing.<br>Remove or relocate obstructions.<br>Reposition door with hinge on opposite side or reverse door swing.<br>Add power-assisted door opener.<br>Prop door open/have someone readily available to open door on election day. |
| 6) With the entrance door fully open is there an opening of at least 32-inches wide or at least one 32-inch opening for a double door? (See figure.)<br><br>**Minimum door opening** | ☐ | ☐ | | | ☐<br>☐<br>☐ | Widen the door opening to 32 inches.<br>If latch projects 5/8 inch, widen to at least 31-3/8 inches.<br>Install offset (swing-clear) hinges. |
| 7) Is the clear floor space between two doors in a series at least 48 inches, plus the width of any door swinging into the space? (See figure at right.)<br><br>**Clear floor space** | ☐ | ☐ | ☐ | | ☐<br>☐ | Reposition or replace doors.<br>Prop one door open on election day. |
| 8) Is the door handle mounted between 34 and 48 inches above the ground/floor? | ☐ | ☐ | ☐ | | ☐ | Reposition door handles. |

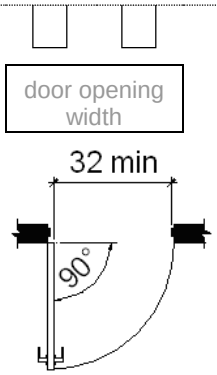

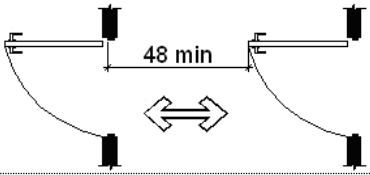

| Questions | Yes | No | NA | ➔ | ➔ | Possible Solutions<br>If no, consider making these changes: |
|---|---|---|---|---|---|---|
| 9) Is the handle operable with a closed fist?<br><br>**Note:** The "closed fist" test—try opening the door or operating the control using only one hand held in a fist. If you can do it and the opening force required isn't too great, so can a person who has limited use of his or her hands. | ☐ | ☐ | ☐ | | ☐<br>☐<br>☐ | Replace with a lever or loop handle.<br>Retrofit with an add-on lever extension.<br>Install power-assisted/automatic openers. |
| 10) Can *interior* doors be opened using a *maximum* force of 5 foot-pounds? (There is no specific requirement for *exterior* doors, but rather a suggested maximum of 8 foot-pounds.)<br><br>**Note:** You can use an inexpensive force meter or a fish scale to measure the force required to open a door. Attach the hook end to the doorknob or handle. Pull on the ring end until the door opens. Read the amount of force required. (You may need to attach a string to the fishhook, tie it to the doorknob or handle and take the measurement.)<br><br>If you don't have a force meter or a fish scale, judge subjectively whether the door is *easy to open.* | ☐ | ☐ | ☐ | | ☐<br>☐<br>☐ | Adjust door closers; oil hinges.<br>Install lighter doors, power-assisted doors, or automatic door openers.<br>Prop door open or have someone readily available to open it for people needing assistance on election day. |
| 11) If the door has a closer, does it take at least 5 seconds to close from a 90-degree open position to within 3 inches of the door latch? (Not a precise measurement.) | ☐ | ☐ | ☐ | | ☐<br>☐ | Adjust door closer.<br>Prop door open/have someone readily available to open it for people needing assistance on election day. |
| 12) Is the height of ***unbeveled*** door thresholds 1/2 inch or less? (See figure at right.)<br><br>**Note:** Height greater than ½ inch must be ramped. | ☐ | ☐ | ☐ | | ☐<br>☐ | Add bevels to both sides so that slope of each bevel is no greater than 1:2.<br>Create temporary ramp with proper slope. |
| 13) Is the slope of ***beveled*** door thresholds 1 inch or less for every 2 inches of length (1:2)?<br><br>**Note:** Thresholds ¾ inch high that have a slope of 1:2 are acceptable. | ☐ | ☐ | ☐ | | ☐<br>☐ | Change bevels to proper slope.<br>Create temporary ramp with proper slope. |

**Proper slope**

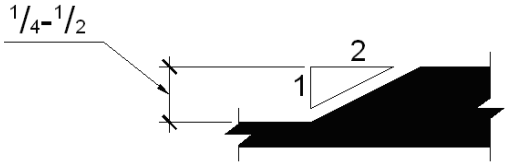

| Questions | Yes | No | NA | ➔ | ➔ | Possible Solutions<br>If no, consider making these changes: |
|---|---|---|---|---|---|---|
| **E. HALLWAYS, CORRIDORS AND VOTING AREA** | | | | | | ** Please mark any questions that are not applicable to this polling place* ***"NA."*** |
| 1) Does the building entrance provide direct access to the voting area? | ☐ | ☐ | | | ☐ | Make another entrance accessible. |
| 2) If not, is there an accessible route of travel from the entrance to the voting area without any stairs, steps or curbs? | ☐ | ☐ | ☐ | | ☐<br>☐ | Provide an alternate accessible route.<br>Make another entrance accessible |
| 3) If there is carpeting or mats along this route, is it:<br>a) low pile?<br>b) tightly woven?<br>c) securely attached along the edges?<br>d) no thicker than 1/2 inch? | ☐<br>☐<br>☐<br>☐ | ☐<br>☐<br>☐<br>☐ | ☐<br>☐<br>☐<br>☐ | | ☐<br>☐<br>☐<br>☐ | Replace carpeting.<br>Place plywood over carpet.<br>Secure edges on all sides.<br>Replace or remove mats. |
| 4) Is this route stable, firm and slip-resistant, with no changes in level greater than ½ inch? | ☐ | ☐ | | | ☐<br>☐<br>☐ | Repair uneven paving.<br>Fill small bumps and breaks.<br>Put plywood down over route. |
| 5) Is the route free of gratings or other openings in the surface larger than ½ inch?<br>**Note:** Elongated openings must be placed perpendicular to the dominant direction of travel. (See **Gratings and other openings** figure on page 5.) | ☐ | ☐ | | | ☐ | Find/create an alternative accessible route. |
| 6) Is this route at least 36 inches wide? | ☐<br>width | ☐ | | | ☐<br>☐ | Move any objects that restrict width in order to provide a 36-inch-wide route.<br>Provide an alternate 36-inch-wide route. |
| 7) Is the route free of any objects that protrude more than 4 inches? If no:<br>a) Is the object within 27 inches of the floor or ground so that it is *low enough* to be detectable by a person using a cane? (See figure on page 4.) | ☐<br>distance<br>☐<br>inches from floor | ☐<br><br>☐ | <br><br>☐ | | <br>☐<br>☐ | **Note:** It is not necessary to remove objects that protrude less than four inches from the wall, no matter their height above the ground or floor.<br>Move or remove protruding objects.<br>Place a cane-detectable object on the ground underneath as a warning barrier. |

| Questions | Yes | No | NA | ➔ | ➔ | Possible Solutions<br>If no, consider making these changes: |
|---|---|---|---|---|---|---|
| b) Is the object at least 80 inches above the floor or ground so that it is *high enough* to walk beneath it? (See figure on page 4.) | ☐ | ☐ | ☐ | | ☐<br>☐ | Move object out of the accessible route.<br>Place a cane-detectable object on the ground underneath as a warning barrier. |
| 8) Do all walks, halls, corridors, passageways, aisles or other circulation spaces have a minimum of 80 inches clear head room? | ☐ | ☐ | | | ☐ | Move obstacles to provide clear headroom. |
| 9) Is there a 5-foot circle or T-shaped space for a person using a wheelchair to turn around in? | ☐ | ☐ | ☐ | | ☐<br>☐ | Rearrange furnishings, displays, equipment.<br>Find an alternate accessible route. |
| 10) Are there interior doors on the accessible route? ***If yes,*** answer questions 10 – 18 below. ***If no,*** go to section **F—Indoor Signs.** | ☐ | ☐ | | | | |
| 11) With doors fully open, is there an opening at least 32-inches wide, or at least one 32-inch opening for a double door? (See **Minimum door opening figure** on page 6.) | ☐ | ☐ | | | ☐<br>☐<br>☐ | Widen the door opening to 32 inches.<br>If latch projects 5/8 inch, widen to at least 31-3/8 inches.<br>Install offset (swing-clear) hinges. |
| 12) Is there an adequate maneuvering clearance for a wheelchair on each side of the doorway? (See Appendix IV for correct maneuvering clearance.) | ☐ | ☐ | | | ☐<br>☐<br>☐<br>☐<br>☐ | Create a larger landing.<br>Remove or relocate obstructions.<br>Reposition door with hinge on opposite side or reverse door swing.<br>Add power-assisted/automatic door opener.<br>Prop door open/have someone readily available to open door on election day. |
| 13) If there are two doors in series, is the clear floor space between them at least 48 inches, plus the width of any door swinging into the space? (See figure at right.) | ☐ | ☐ | ☐ | | ☐<br>☐ | Reposition/replace doors.<br>Prop one door open on election day.<br> 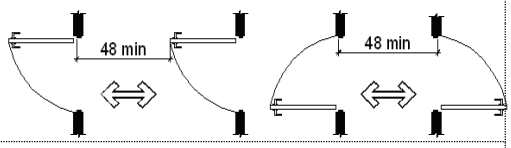 |
| 14) Is the door handle mounted between 34 and 48 inches above the ground/floor? | ☐ | ☐ | ☐ | | ☐ | Reposition door handles. |

| Questions | Yes | No | NA | ➔ | ➔ | Possible Solutions<br>If no, consider making these changes: |
|---|---|---|---|---|---|---|
| 15) Is the door handle operable with a closed fist? | ☐ | ☐ | ☐ | | ☐<br>☐<br>☐<br>☐ | Replace with a lever or loop handle.<br>Retrofit with an add-on lever extension.<br>Install power-assisted/automatic openers.<br>Prop door open or have someone readily available to open door on election day. |
| 16) Can doors be opened with a *maximum* of 5 foot-pounds of force? | ☐<br>force | ☐ | ☐ | | ☐<br>☐<br>☐ | Adjust door closers; oil hinges.<br>Install lighter doors, power-assisted doors, or automatic door openers.<br>Prop door open or have someone readily available to open door on election day. |
| 17) If the door has a closer, does it take at least 3 seconds to close from a 70-degree open position to within 3 inches of the door latch? | ☐<br>time | ☐ | ☐ | | ☐<br>☐ | Adjust door closers.<br>Prop door open or have someone readily available to open door on election day. |
| 18) Is the height of unbeveled door thresholds 1/2 inch or less? | ☐<br>height | ☐ | ☐ | | ☐<br>☐ | Add bevels to both sides so that slope of each bevel is no greater than 1:2.<br>Use temporary ramps of proper slope. |
| 19) Is the slope of beveled door thresholds 1 inch or less for every 2 inches of length (1:2)? | ☐<br>slope | ☐ | ☐ | | ☐<br>☐ | Change bevels to proper slope.<br>Put down temporary ramps of proper slope. |
| **F. INDOOR SIGNS**<br>All signs designating permanent rooms, spaces, and exits relevant to getting to the voting area must comply with the following: | | | ☐ | | | 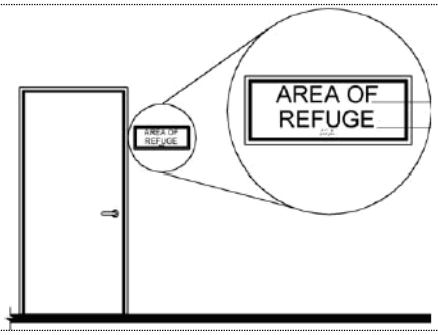 |
| 1) Are all such signs mounted between 48 and 60 inches above the floor? | ☐<br>height | ☐ | | | ☐ | Relocate signs. |

| Questions | Yes | No | NA | ➔ | ➔ | Possible Solutions<br>If no, consider making these changes: |
|---|---|---|---|---|---|---|
| 2) Are all such signs mounted on a wall next to the latch side of door or as close as possible to it? | ☐ | ☐ | | | ☐ | Relocate signs. |
| 3) Do all such signs have high-contrast characters raised 1/32 inch above background with a height between 5/8 and 2 inches? | ☐ | ☐ | | | ☐ | Provide high contrast, raised characters of proper height. |
| 4) Do all such signs also have Braille text? | ☐ | ☐ | | | ☐ | Provide Braille text. |
| 5) Are pictograms a minimum height of 6 inches and accompanied by Braille and raised characters? | ☐ | ☐ | | | ☐<br>☐ | Provide raised characters and Braille.<br>Provide pictograms of correct height. |
| **G. MOVING BETWEEN FLOORS (to get to the voting area)**<br>**Note:** Post signs directing people along an accessible route to ramps, lifts, or elevators. | | | ☐ | | | ** Please mark any questions that are not applicable to this polling place **"NA."***<br>☐ |
| 1) Is there an indoor route of travel to the voting area without stairs? | ☐ | ☐ | | | ☐<br>☐<br>☐ | Relocate to a voting area on an accessible route.<br>Find an alternate accessible route.<br>Add a ramp or lift. |
| 2) Does the accessible indoor route have a ramp? ***If yes,*** complete **APPENDIX I—RAMPS**. | ☐ | ☐ | | | ☐ | Attach **APPENDIX I—RAMPS**. |
| 3) Does the accessible route have an elevator? ***If yes,*** complete **APPENDIX II—ELEVATORS**. | ☐ | ☐ | | | ☐ | Attach **APPENDIX II—ELEVATORS**. |
| 4) Are there lifts? ***If yes,*** complete **APPENDIX III—LIFTS**. | ☐ | ☐ | | | ☐ | Attach **APPENDIX III—LIFTS**. |

character height

pictogram height

| Election Day Checklist | | | Possible Solutions |
|---|---|---|---|
| **H. VOTING AREA**<br>On Election Day, the following requirements must be met in order to ensure the voting area at the polling place is accessible. A column is provided to list possible solutions. | Yes | No | If no, what are possible solutions: |
| 1) Is adequate space available in the voting area to access check-in tables, voting demonstration areas (if provided), and voting stations for people in wheelchairs or on scooters? | °C | °C | _____<br>_____ |
| 2) Is an accessible voting station that allows a voter to sit at a table provided?<br>▪ of at least 30 inches wide by 19 inches deep.<br>▪ with clear knee space of at least 27 inches.<br>▪ with the top between 28 and 34 inches above the floor. | °C | °C | _____<br>_____ |
| 3) Is the same degree of privacy provided to those who sit to vote as is provided to those who don't sit?<br>▪ Also ensure the voter accessibility terminal (AutoMARK) screen is not visible to the public. | °C | °C | _____<br>_____ |
| 4) Are typed instructions in 18 point or larger type font provided for voters with visual impairments? It is suggested that a magnifying glass or low-cost magnifying page be made available as well. | °C | °C | _____<br>_____ |
| 5) Is at least one acceptable over-sized and easily graspable ballot marking device provided? | °C | °C | _____<br>_____ |
| 6) Is the area free of any objects that protrude more than 4 inches from the walls?<br>(See figure on page 5 for details.) | °C | °C | _____<br>_____ |
| 7) Are voting instructions able to be posted on the wall between 48 and 60 inches above the floor? (Indicate that large-type instructions and other aids are available.) | °C | °C | _____<br>_____ |

| Questions | Yes | No | NA | ➔ | ➔ | Possible Solutions<br>If no, consider making these changes: |
|---|---|---|---|---|---|---|
| **I. RESTROOMS** | | | | | | |
| 1) Are restrooms available? | ☐ | ☐ | | | ☐ | Explain:_____ |
| 2) Are restrooms available to the public? ***If yes,*** answer questions 3 through 13. | ☐ | ☐ | ☐ | | ☐ | Explain: _____<br>_____ |
| 3) Is the restroom easily located and on an accessible path of travel? | ☐ | ☐ | ☐ | | ☐<br>☐ | Install signs identifying an accessible path.<br>Provide a temporary accessible restroom for voting day. |
| 4) With the restroom entrance door open 90 degrees, is there an opening at least 32 inches wide? (See **Minimum door opening** figure on page 6.) | ☐<br>width | ☐ | ☐ | | ☐<br>☐<br>☐ | Widen the door opening to 32 inches.<br>If latch projects 5/8 inch, widen to at least 31-3/8 inches.<br>Install offset (swing-clear) hinges. |
| 5) If the restroom toilets are in stalls, is there a door opening at least 32 inches wide? (See **Minimum door opening** figure on page 6.) | ☐<br>width | ☐ | ☐ | | ☐<br>☐<br>☐ | Widen the door opening to 32 inches.<br>If latch projects 5/8 inch, widen to at least 31-3/8 inches.<br>Install offset (swing-clear) hinges. |
| 6) Is there sufficient clear floor space (excluding door swing) to access the toilet for people using wheelchairs? (See figures at right.) | ☐<br>clear space | ☐ | ☐ | | ☐ | Modify the area to provide access. |
| 7) Is the height of the toilet seat between 17 and 19 inches above the floor? (See figure below.) | ☐<br>height | ☐ | ☐ | | ☐<br>☐ | Modify the seat height.<br>Install a new toilet or toilet seat. |
| 8) Are grab bars installed 1-1/2 inches from wall and between 33 and 36 inches above the floor? | ☐<br>height | ☐ | ☐ | | ☐ | Install or modify grab bars. |

**Minimum clear floor space for toilets**

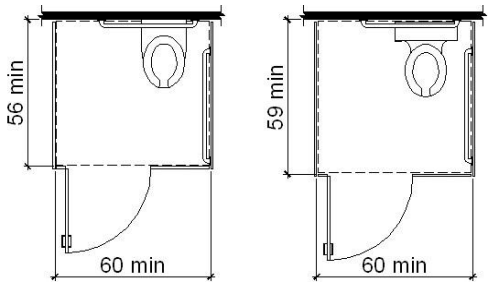


**wall-hung** **floor-mounted**

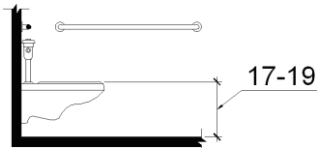


**Seat height**

| Questions | Yes | No | NA | ➔ | ➔ | Possible Solutions<br>If no, consider making these changes: |
|---|---|---|---|---|---|---|
| 9) Are grab bars the correct length? (See figures below.) | ☐ | ☐ | ☐ | | ☐ | Modify or install new grab bars. |

**Rear wall grab bar**

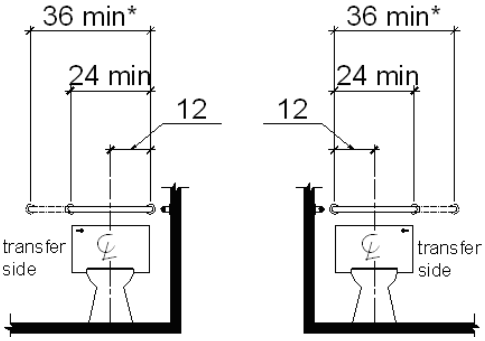


**Side wall grab bar**

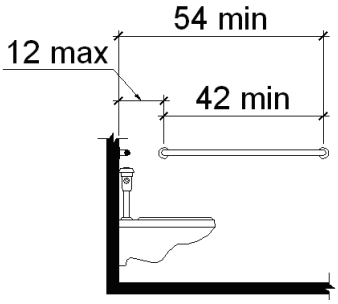


**Note:** Rear grab bar should be a minimum of 36 inches long. If wall space is limited, a minimum of 24 inches is allowed.

| | | | | | | |
|---|---|---|---|---|---|---|
| 10) Is the toilet paper dispenser between 7 and 9 inches in front of the toilet and is the outlet of the dispenser between 15 and 48 inches above the floor? | ☐ | ☐ | ☐ | | ☐ | Adjust the dispenser to an accessible position. |
| | inches from toilet | | | | | |
| | height | | | | | |
| 11) Is the top of the sink a maximum of 34 inches above the floor? (See figure below.) | ☐ | ☐ | ☐ | | ☐ | Modify the sink location to improve accessibility. |
| | height | | | | ☐ | Install a new accessible sink. |
| 12) Is there a minimum depth of 8 inches for knee clearance and a minimum clear width of 30 inches? (See figure below.) | ☐ | ☐ | ☐ | | ☐ | Modify the sink location to improve accessibility. |
| | knee clearance | | | | ☐ | Install a new accessible sink. |
| | width | | | | | |

**Accessible sink and mirror**

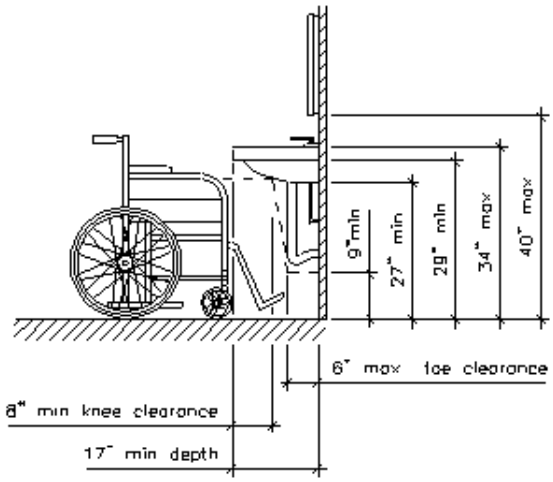


| | | | | | | |
|---|---|---|---|---|---|---|
| 13) Are soap and towel dispensers mounted no higher than 48 inches above the floor? | ☐ | ☐ | ☐ | | ☐ | Adjust location of dispensers to the correct position |
| | height | | | | | |

This **Voting Accessibility Checklist** is a review of whether a citizen with a disability can access the voting process in their precinct by having a way to (1) enter the polling site, and (2) get to the voting location once inside the building.

This checklist is not intended to imply, in any manner, official compliance with the Americans with Disabilities Act Accessibility Guidelines (ADAAG). It is designed to determine accessibility to the voting process statewide for people with disabilities.

Completing this checklist does not in any way abrogate the responsibility or liability of owners of buildings that serve as a voting location from compliance with the Americans with Disabilities Act (ADA) or state law.

**Polling Place Name:** _____

Polling Place Address: _____

County: _____

Precinct: _____

**Signature of County Election Official:** _____

Title: _____

Date of Signature: _____

**Surveyor:** _____

Date of Survey: _____

**After completing this checklist, please send a copy to:**

Montana Secretary of State
Elections & Voters Services Division
PO Box 202801
Helena, MT 59620-2801

Email: soselections@mt.gov
Phone: 406-444-9608

## APPENDIX I—RAMPS

Complete one copy for each ramp at the polling place.

County _____ Precinct/Ward/District _____

Polling Place Name _____

Polling Place Address:_____
(street address) (city) (state) (zip)

| Questions | Yes | No | NA | ? | ? | Possible Solutions<br>If no, consider making these changes: |
|---|---|---|---|---|---|---|
| 1) Are the ramp slopes no greater than 1 inch of height for each 12 inches of length? (Where space is limited, exceptions in table below apply.)<br>**Note:** Slope is the ratio of height to length. 1:12 means the ramp height increases one inch for every 12 inches of ramp length. | ℃ | ℃ | ℃ | ℃<br>℃<br>℃<br>℃ | | Exceptions in table below apply.<br>Lengthen ramp to decrease slope.<br>Relocate ramp.<br>Reconfigure ramp to include switchbacks – a reverse in direction accomplished with a U-shaped turn. |
| slope | | | | | | |

| Maximum Rise | Maximum Slope* |
|---|---|
| 3 inches | Steeper than 1:10 but not steeper than 1:8 |
| 6 inches | Steeper than 1:12 but not steeper than 1:10 |

*A slope steeper than 1:8 is prohibited.

| | | | | | | |
|---|---|---|---|---|---|---|
| 2) Is there a 5-foot long level landing at least as wide as the ramp leading to it located: | | | | | | |
| c) after no more than 30 feet of ramp? | ℃ | ℃ | ℃ | ℃ | | Install landing. Remodel or relocate ramp. |
| d) at the top and bottom of each ramp? | ℃ | ℃ | ℃ | ℃ | | Install landing. Remodel or relocate ramp. |
| 3) If a ramp changes direction, is there a landing between runs of at least 60 inches by 60 inches? (See figure at right.) | ℃ | ℃ | ℃ | ℃ | | Install landing. Remodel or relocate ramp. |

**Landing for change in direction**

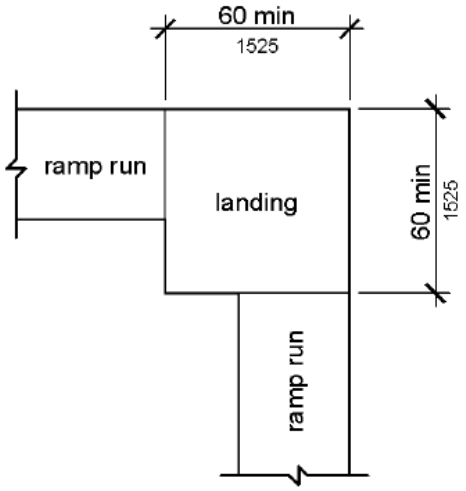


| | | | | | | |
|---|---|---|---|---|---|---|
| 4) Do all ramps with sides that drop off | ℃ | ℃ | ℃ | ℃ | | Provide some type of edge |

| Questions | Yes | No | NA | ? | ? | Possible Solutions<br>If no, consider making these changes: |
|---|---|---|---|---|---|---|
| have some type of edge protection within 4 inches of the ramp platform? (A curb, wall, railing, projecting surface or extended floor/ground surface of at least 12 inches prevents people from slipping off the ramp.) | inches | | | | | protection.<br>℃ Extend floor surface adjacent to ramp.<br>℃ Adjust height of edge protection. |
| 5) Do all ramps longer than 6 feet have railings on both sides? | ℃ | ℃ | ℃ | | ℃ | Add railings. |
| 6) Does each handrail extend parallel to the floor at least 12 inches beyond the beginning and end of the ramp? | ℃ | ℃ | ℃ | | ℃<br>℃ | Replace handrails.<br>Add a handrail extension. |
| 7) Are all railings sturdy and mounted at a consistent height between 34 and 38 inches above the ramp surface? | ℃<br>height | ℃ | ℃ | | ℃<br>℃ | Adjust height of railing.<br>Secure handrails firmly. |
| 8) Is handrail diameter between 1-1/4 inch and 2 inches? | ℃<br>diameter | ℃ | ℃ | | ℃ | Replace handrails. |
| 9) Is there a minimum of 1-1/2 inches of clear space between each handrail and the mounting wall (or an adjacent wall, if not wall-mounted)? | ℃<br>clear space | ℃ | ℃ | | ℃ | Reposition/replace handrails. |
| 10) Are handrail ends rounded?<br>*-or-*<br>11) Do they return to the wall, floor or a post? | ℃<br><br>℃ | ℃<br><br>℃ | ℃<br><br>℃ | | ℃<br><br>℃ | Round handrail ends or replace handrails.<br><br>Reposition/replace handrails. |
| 12) Is the width between railings of the ramp at least 36 inches? | ℃<br>width | ℃ | ℃ | | ℃<br>℃ | Relocate handrails.<br>Widen the ramp. |
| 13) Is the inside handrail of a switchback continuous? | ℃ | ℃ | ℃ | | ℃ | Reposition/replace handrails. |
| 14) Is the ramp stable, firm and slip-resistant, with no changes in level greater than ½ inch? | ℃ | ℃ | ℃ | | ℃<br>℃<br>℃ | Make repairs to stabilize the ramp.<br>Add non-slip surface material.<br>Fill small bumps and breaks. |

## APPENDIX II—ELEVATORS

**Note:** Most of these elevator requirements are for existing elevators. If you're installing, building, or remodeling an elevator, consult an architect or your county attorney for current standards.

County _____ Precinct/Ward/District _____

Polling Place Name _____

Polling Place Address: _____
(street address) (city) (state) (zip)

| Questions | Yes | No | ? ? | Possible Solutions<br>If no, consider making these changes: |
|---|---|---|---|---|
| 1) Are there both visible and audible door opening/closing and floor indicators? (1 tone = up, 2 tones = down.) | °C | °C | °C<br>°C | Install visible signals.<br>Install audible signals. |
| 2) Are the hallway call buttons located no higher than 54 inches above the floor? | °C<br>height | °C | °C<br>°C | Lower call buttons.<br>Provide a reach stick, permanently attached to the wall near the call button. |
| 3) Do the controls inside the elevator cab have both raised and Braille lettering next to them? | °C | °C | °C | Install raised lettering and Braille in the elevator cab adjacent to all control buttons. |
| 4) Are controls mounted between 15 and 54 inches above the floor? | °C<br>height | °C | °C<br>°C | Move controls to within the reach range.<br>Provide reach stick, permanently attached to the elevator wall near the controls. |
| 5) Is there a sign on both doorjambs identifying each floor? | °C | °C | °C | Install doorjamb signs to identify floor numbers 60 inches above the floor. Characters should be 2 inches high and provided in both raised lettering and Braille. |
| 6) Are doorjamb sign characters raised, a minimum height of 2 inches, and in Braille? | °C | °C | °C | Install doorjamb signs to identify floor numbers 60 inches above the floor. Characters should be 2 inches high and provided in both raised lettering and Braille. |
| 7) Are the main entry-level floor buttons indicated with a raised star? | °C | °C | °C | Install the proper indicators adjacent to the floor buttons. |
| 8) Do the elevator doors provide a clear width of at least 32 inches? | °C<br>width | °C | °C<br>°C<br>°C | Make changes to the elevator doors to provide the necessary width.<br>Find an alternate accessible route.<br>Move to an accessible location. |

| Questions | Yes | No | ? ? | Possible Solutions<br>If no, consider making these changes: |
|---|---|---|---|---|
| 9) Does the elevator car provide clear floor space of a minimum depth of 54 inches and minimum width of 36 inches? (See figure at right.)<br>size<br>**Elevator floor space** | °C | °C | °C<br>°C | Find an alternate accessible route.<br>Move to an accessible location.<br> 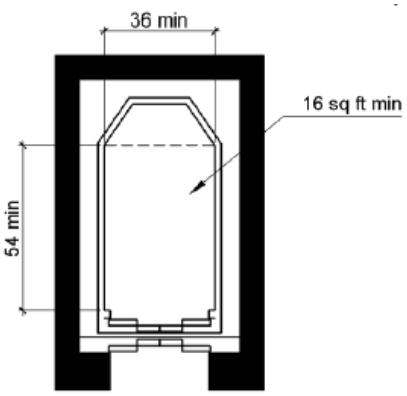 |
| 10) Do the elevator doors remain fully open for a minimum of 3 seconds?<br>time | °C | °C | °C | Adjust timing of door closing.. |
| 11) Does the elevator floor stop within a maximum of ½ inch of the floor landing? | °C | °C | °C | Adjust elevator car stops to correct stopping point. |
| 12) When the elevator car stops on each floor, is the gap between the car and the floor edge a maximum of 1-1/4 inch? | °C | °C | °C | Add lip to floor landing to lessen gap. |
| 13) Is a two-way means of emergency communication provided that: | | | | |
| a) is usable without voice communication (push-button activated)? | °C | °C | °C | Modify communication system. |
| b) is identified with raised characters and Braille? | °C | °C | °C | Add tactile identification with raised letters and Braille. |
| c) connects with emergency or authorized personnel rather than an automated system? | °C | °C | °C | Modify communication system.<br>**Note:** Use of a handset as part of the communication system is prohibited. |
| 14) Regarding any carpeting/mats, are they: | | | | |
| d) low pile? | °C | °C | °C | Replace carpeting. |
| e) tightly woven? | °C | °C | °C | Place plywood over carpet. |
| f) securely attached along the edges? | °C | °C | °C | Secure edges on all sides. |
| g) no thicker than ½ inch? | °C | °C | °C | Replace or remove mats. |

## APPENDIX III—LIFTS

Complete one copy for each lift at the polling place.

**Note:** Chairlifts without a platform are not allowed, since such lifts require the user to transfer to a seat.

County _____ Precinct/Ward/District _____

Polling Place Name _____

Polling Place Address: _____
(street address) (city) (state) (zip)

| Questions | Yes | No | ? ? | Possible Solutions<br>If no, consider making these changes: |
|---|---|---|---|---|
| 1) Can the lift be used without assistance? | ℃ | ℃ | ℃ | Assign someone to be readily available to operate the lift for people needing assistance on voting day. |
| 2) Are end doors a minimum of 32 inches and side doors a minimum of 42 inches wide? (See figure at right.) | ℃ | ℃ | ℃ | Modify the lift so that doors meet the minimum standards. |
| 3) Does the lift door remain open for a minimum of 20 seconds? | ℃ | ℃ | ℃ | Adjust the door mechanism so that the door remains open for at least 20 seconds. |
| 4) Does the floor of the lift have at least 30 by 48 inches of clear space? | ℃ | ℃ | ℃<br>℃ | Alter the lift to provide the required clear floor space.<br>Install a larger floor platform. |
| 5) Are lift controls mounted between 15 and 54 inches above the floor? | ℃ | ℃ | ℃ | Move controls to within the reach range. |
| 6) Are lift controls operable with one hand, without tight grasping, pinching, or twisting of the wrist? | ℃ | ℃ | ℃<br>℃ | Provide alternate method of operating lift independently.<br>Assign someone to be readily available to operate the lift for people needing assistance on election day. |

**Minimum width for lift doors and gates**

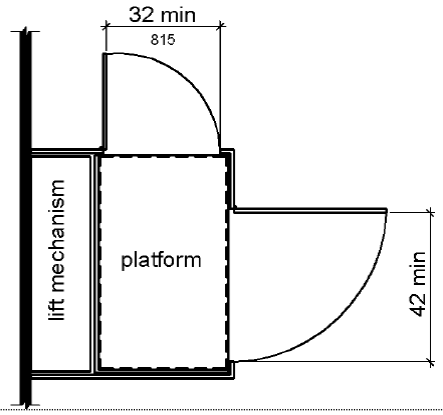

| Questions | | | | | | Possible Solutions |
|---|---|---|---|---|---|---|
| | **Yes** | **No** | **NA** | ? | ? | **If no, consider making these changes:** |
| 7) Are carpeting or mats: | | | | | | |
| a) low pile? | ℃ | ℃ | ℃ | | ℃ | Replace carpeting. |
| b) tightly woven? | ℃ | ℃ | | | ℃ | Place plywood over carpet. |
| c) securely attached along the edges? | ℃ | ℃ | | | ℃ | Secure edges on all sides. |
| d) no thicker than 1/2 inch? | ℃ | ℃ | | | ℃ | Replace or remove mats. |

## APPENDIX IV—MANEUVERING CLEARANCE AT DOORS AND GATES

These figures show the clear floor space required to allow a person using a wheelchair or scooter sufficient maneuvering room to pull the door open and then enter. The size of the clear floor space varies depending on the direction of approach (shown by the arrows) and the door swing.

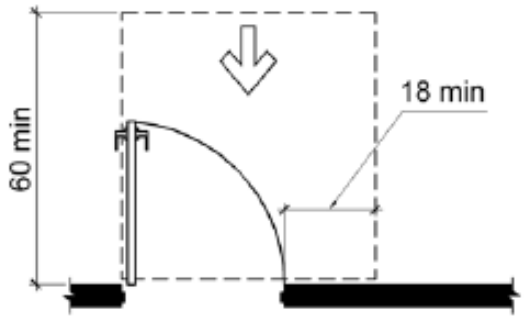


(a)
front approach, pull side

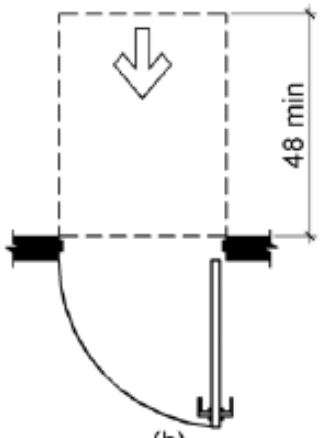


(b)
front approach, push side

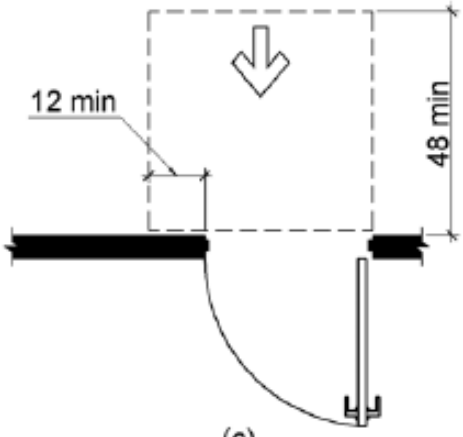


(c)
front approach, push side, door provided with both closer and latch

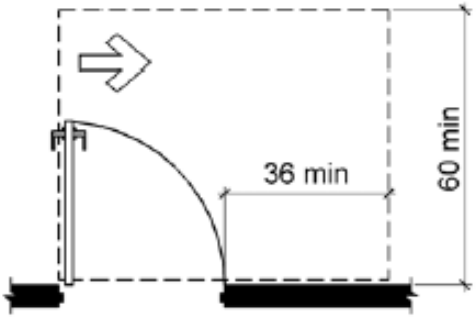


(d)
hinge approach, pull side

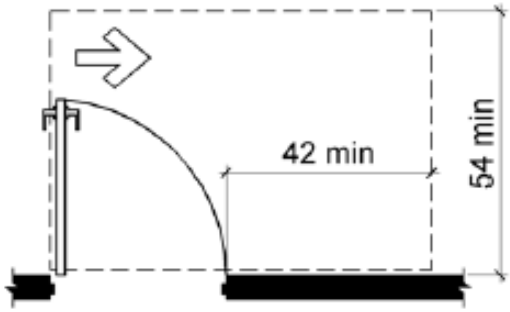


(e)
hinge approach, pull side

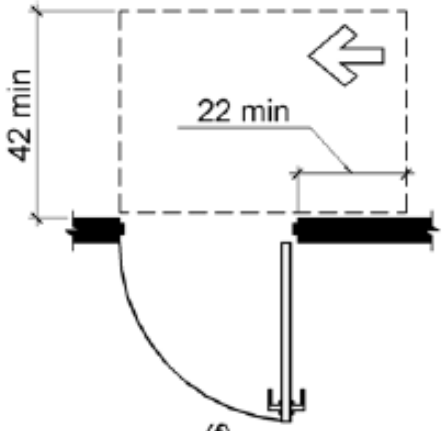


(f)
hinge approach, push side

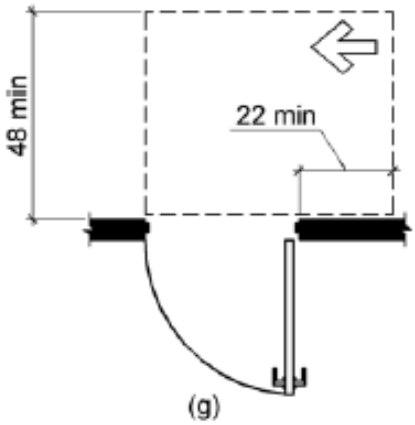


(g)
hinge approach, push side, door provided with both closer and latch

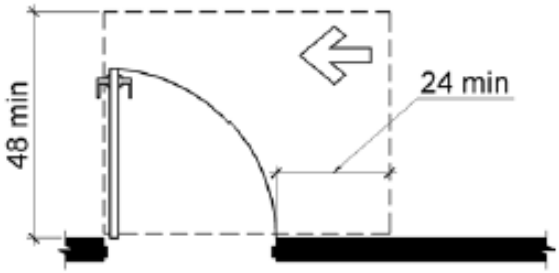


(h)
latch approach, pull side

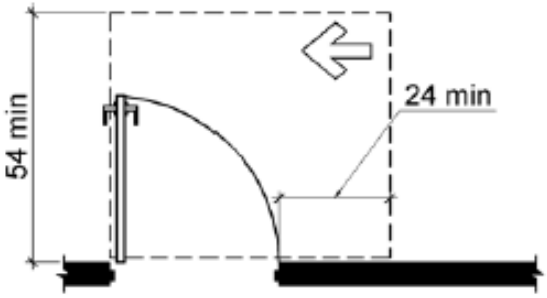


(i)
latch approach, pull side, door provided with closer

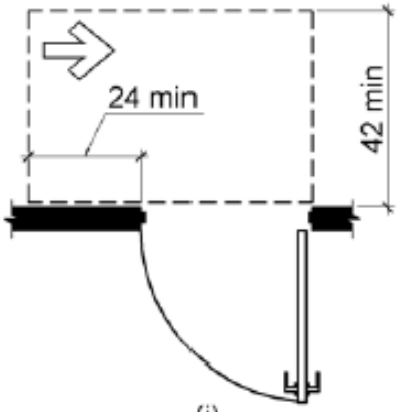


(j)
latch approach, push side

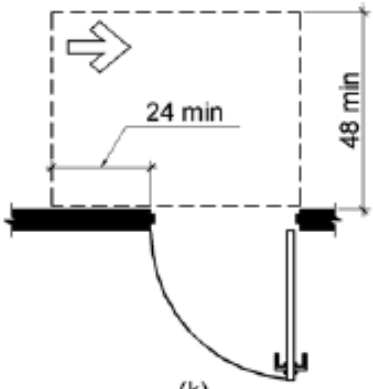


(k)
latch approach, push side, door provided with closer